ENGR 212 Laboratory Experiment 6 – Informal lab report

Operational Amplifiers – Basic Characteristics and Applications

Objectives:

1. Examine the basic characteristics of the op-amp.
2. Implement the inverting and non-inverting amplifier circuits on a breadboard for testing.

Materials:

1. One Agilent 34401A digital multi-meter (DMM)
2. Three dc power supplies
3. One breadboard
4. Resistors
5. One LM324 op-amp (The terminal marked V_{EE}, GND on the chip will be the negative power supply terminal

Ideal Op Amp Model:

For first-order design, most designers use an ideal op amp model. This model reduces the complexity of the circuit analysis and provides easy hand calculation. Further approximation techniques and computer simulation allow evaluation of the more complex non-ideal performance. The ideal op amp assumptions are summarized as follows:

1. Open loop gain is very large approaching infinity.
2. Since output is not infinite and open loop gain is approaching infinity, the voltage drop between the inverting and non-inverting terminals is zero.
3. The input resistance between the inverting and non-inverting terminal is very high approaching infinity. Therefore, no currents enter these two terminals.

Inverting Amplifier:

Applying the ideal op amp assumptions to the circuit on the right-hand side, the inverting node of the op-amp must be at ground and a KCL equation can be written at this node as

$$\frac{0-v_{IN}}{R_1}=\frac{v_{OUT}-0}{R_2}.$$

And thus

$$v_{OUT}=-\frac{R_2}{R_1}v_{IN}$$

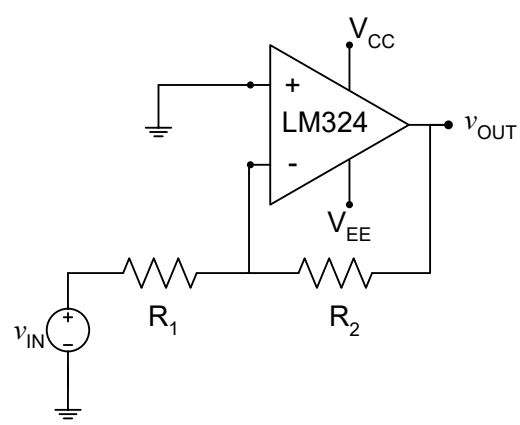

Experimentation:

1. Build the inverting amplifier circuit with R_1=11 kΩ and R_2=33 kΩ. Use V_{CC}=+10 volts and V_{EE}=-10 volts. **Note: Use the two power supplies on the cadet board (set them to +10 volts and -10 volts respectively for powering the chip itself).**
2. Perform a manual dc voltage sweep of the input from 0 volts to 4 volts with an increment of 0.5 volt. Use the other voltage supply at your station for this purpose (this is v_{in}).

3. Measure both v_{IN} and v_{OUT} with the DMM. Record your data points and generate a plot of the data (plot using Excel or Matlab). Determine the gain $\frac{v_{OUT}}{v_{IN}}$ in the linear range.
4. Measure and record the actual resistor values in your circuit.
5. Generate the theoretical results with your measured resistor values using the equations above and show the calculated results on the same plot.
6. Quantify the percentage error between the measured and the calculated data.

Non-inverting Amplifier:

Applying the ideal op amp assumptions to the non-inverting amplifier circuit on the right-hand side, the inverting node of the op-amp must be at v_{IN} and a KCL equation can be written at this node as

$$\frac{v_{IN}-0}{R_1}+\frac{v_{IN}-v_{OUT}}{R_2}=0.$$

And thus

$$v_{OUT}=\left(1+\frac{R_2}{R_1}\right)v_{IN}$$

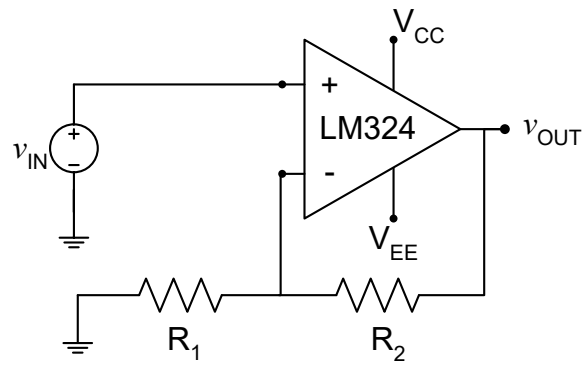

Experimentation:

1. Build the non-inverting amplifier circuit with R_1=11 kΩ and R_2=33 kΩ. Use V_{CC}=+10 volts and V_{EE}=-10 volts.

Note: Use the two power supplies on the cadet board (set them to +10 volts and -10 volts respectively for powering the chip itself).

2. Perform a manual dc voltage sweep of the input from 0 volts to 4 volts with an increment of 0.5 volt. Use the other voltage supply at your station for this purpose.
3. Measure both v_{IN} and v_{OUT} with the DMM. Record your data points and generate a plot of the data (plot using Excel or Matlab). Determine the gain $\frac{v_{OUT}}{v_{IN}}$ in the linear range.
4. Measure and record the actual resistor values in your circuit.
5. Generate the theoretical results with your measured resistor values using the equations above and show the calculated results on the same plot.
6. Quantify the error between the measured and the calculated data.

The report for this lab is an informal lab report by group. This means that it does not have to be in the format of a formal report but should include your calculations, data, plots and answers to all questions.

Inverting Amplifier: (V_{CC} = _____ volts; V_{EE} = _____ volts; R_1 = _____ Ω; R_2 = _____ Ω)					
v_{IN} (DMM)	v_{OUT} (DMM)	v_{OUT} / v_{IN} (measurement)	v_{IN} (calculated)	v_{OUT} (calculated)	v_{OUT} / v_{IN} (calculated)

Non-inverting Amplifier: (V_{CC} = _____ volts; V_{EE} = _____ volts; R_1 = _____ Ω; R_2 = _____ Ω)					
v_{IN} (DMM)	v_{OUT} (DMM)	v_{OUT} / v_{IN} (measurement)	v_{IN} (calculated)	v_{OUT} (calculated)	v_{OUT} / v_{IN} (calculated)

LM324, LM324A, LM224, LM2902, LM2902V, NCV2902

Single Supply Quad Operational Amplifiers

The LM324 series are low–cost, quad operational amplifiers with true differential inputs. They have several distinct advantages over standard operational amplifier types in single supply applications. The quad amplifier can operate at supply voltages as low as 3.0 V or as high as 32 V with quiescent currents about one–fifth of those associated with the MC1741 (on a per amplifier basis). The common mode input range includes the negative supply, thereby eliminating the necessity for external biasing components in many applications. The output voltage range also includes the negative power supply voltage.

- Short Circuited Protected Outputs
- True Differential Input Stage
- Single Supply Operation: 3.0 V to 32 V (LM224, LM324, LM324A)
- Low Input Bias Currents: 100 nA Maximum (LM324A)
- Four Amplifiers Per Package
- Internally Compensated
- Common Mode Range Extends to Negative Supply
- Industry Standard Pinouts
- ESD Clamps on the Inputs Increase Ruggedness without Affecting Device Operation

MAXIMUM RATINGS (T_A = +25°C, unless otherwise noted.)

Rating	Symbol	LM224 LM324, LM324A	LM2902, LM2902V	Unit
Power Supply Voltages Single Supply Split Supplies	 V_{CC} V_{CC}, V_{EE}	 32 ±16	 26 ±13	Vdc
Input Differential Voltage Range (Note 1)	V_{IDR}	±32	±26	Vdc
Input Common Mode Voltage Range	V_{ICR}	–0.3 to 32	–0.3 to 26	Vdc
Output Short Circuit Duration	t_{SC}	Continuous		
Junction Temperature	T_J	150		°C
Storage Temperature Range	T_{stg}	–65 to +150		°C
Operating Ambient Temperature Range	T_A			°C
LM224		–25 to +85		
LM324, 324A		0 to +70		
LM2902			–40 to +105	
LM2902V, NCV2902			–40 to +125	

1. Split Power Supplies.

ON Semiconductor®

http://onsemi.com

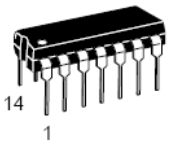

PDIP–14
N SUFFIX
CASE 646

SO–14
D SUFFIX
CASE 751A

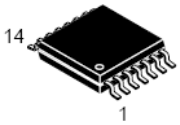

TSSOP–14
DTB SUFFIX
CASE 948G

PIN CONNECTIONS

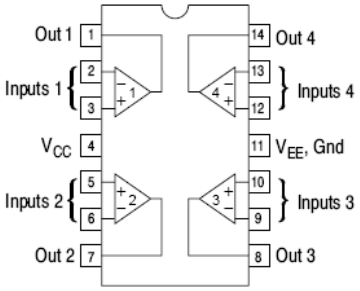

(Top View)

ORDERING INFORMATION

See detailed ordering and shipping information in the package dimensions section on page 9 of this data sheet.

DEVICE MARKING INFORMATION

See general marking information in the device marking section on page 10 of this data sheet.